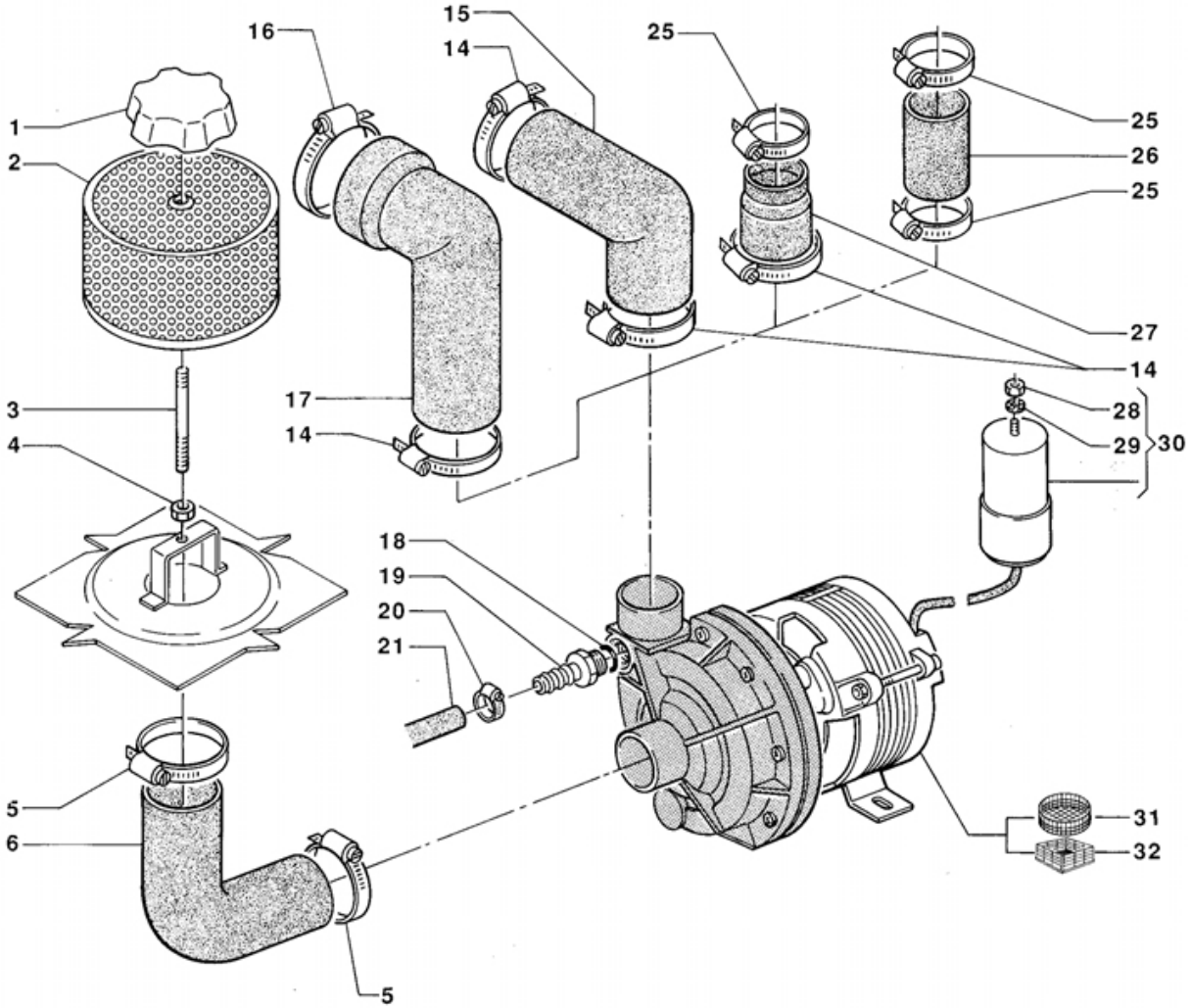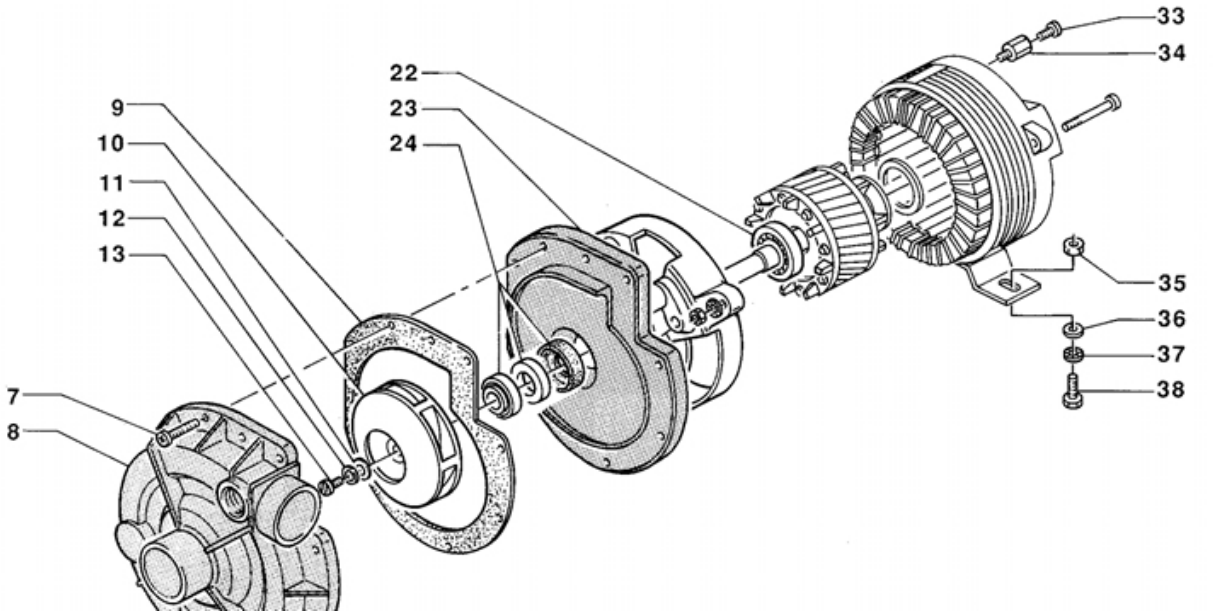POMPE LAVAGGIO - POMPES LAVAGES - WASCHANLAGENPUMPEN - WASHING PUMPS - BOMBAS LAVADO